GenSet

MPM 802 D



Total control

Asynchronous alternator

Heavy duty

Cutting edge engine driven welder generator designed to work in heavy duty condition. The unit is fitted with two operators working stations 400A output each. Following GenSet's philosophy, combines a simple and robust design with reiable and time-tested technology for high performances in even the most challenging conditions. Designed for STICK, TIG, and MIG welding, it offers a great versatility, ensuring reliable performance across a variety of tasks, with simultaneous availability of welding power and three/single-phase output for auxiliary tools. The integrated bunded tank makes operational management easier, improving safety and environmental protection.

MPM 802 D STANDARD EQUIPMENT



MPM 802 D



Tungsten Inert Gas (TIG)
Metal Inert Gas (MIG)
Shielded Metal Arc Welding (SMAW)

- Arc Force Control
- Remote control socket
- Carbon Arc Gouging (CAG) socket
- Low-High amps switch for a more accurate arc control
- Auto engine protection shutdown system with warning lights in case of:
  - battery charger failure
  - low fuel level
  - low oil pressure
  - high oil temperature
- Starting battery
- Emergency stop button
- Fuel level gauge
- Hourmeter
- Voltmeter
- Power output protections
- Earth leakage circuit breaker (ELCB)
- Engine oil drain pipe
- Central lifting hook
- Fork lift pockets

- Socket kit:
  2 x 16 A - 230 V - IP 67 single-phase socket
  1 x 32 A - 230 V - IP 67 single-phase socket
  1 x 32 A - 400 V - IP 67 three-phase socket

DIMENSIONS IN MM

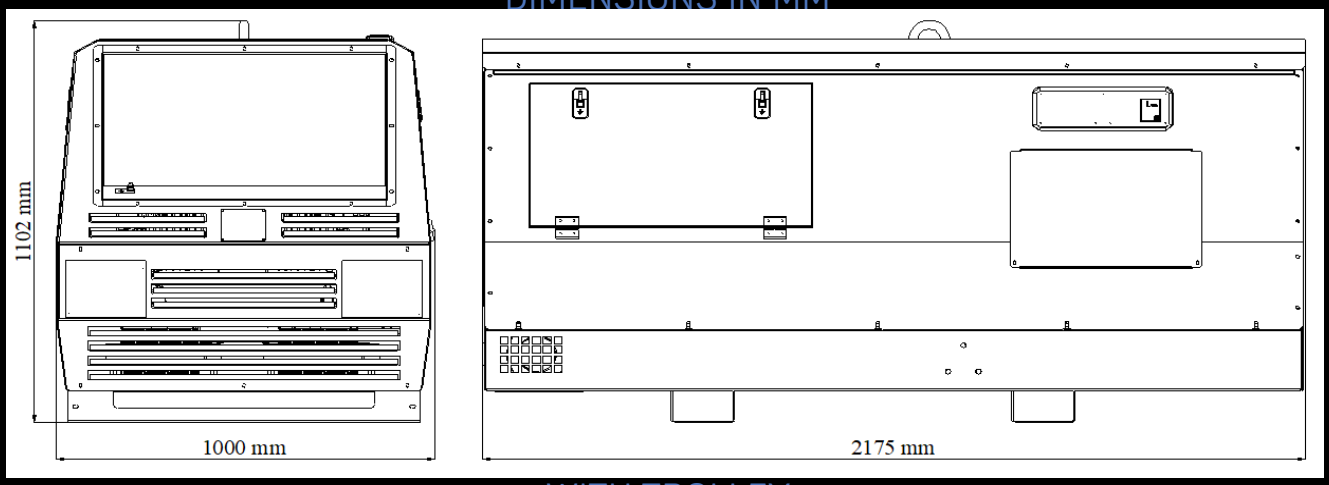

WITH TROLLEY

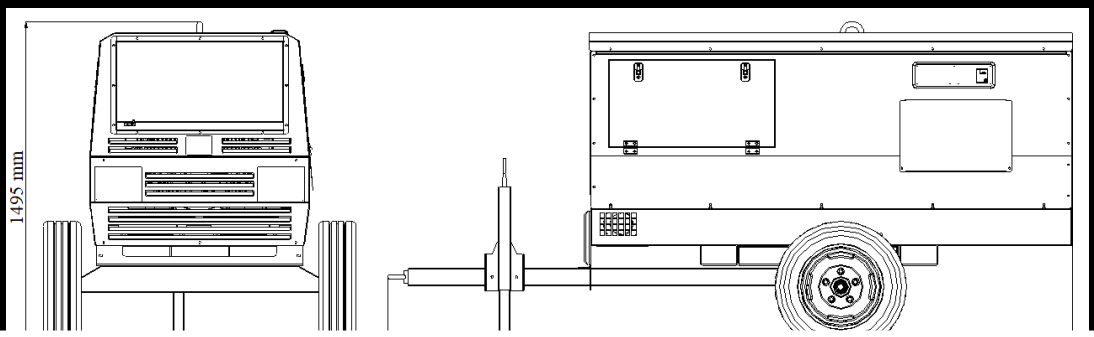

MPM 802 D TECHNICAL DATA

	MPM 802 D
Noise level Lwa	99 (74 dB a 7 mt)
AC generator-50Hz	Asynchronous
Three-phase max power	25 kVA - 400 V
Single-phase max power	9 kVA - 230 V
Power Factor	cos ϕ 0,8
Single unit DC welding	Electronic current regulation
Duty Cycle @ 60%	350 A - 34 V
Output range	30 A - 400 A
Open Circuit Voltage	70 V
Max welding rod	10 mm
Dual weld mode	400A + 400A / 32V / 60%
Deutz 1500 RPM engine	BF4M 2011C
Fuel	Diesel
No. cylinders	4
Power	80,2 HP (59 kWm)
Displacement	3120 cm3
Cooling system	Oil
Starting system	Electric
Fuel tank capacity	70 lt
Fuel consumption @75%	13,28 lt/h
Insulation Class	H
Ambient temperature	40 °C
Altitude	1000 mt
Degree of protection	IP 23
Dimensions (LxWxH)	2175x1000x1102 mm
Dry weight	1134 kg

MPM 802 D CUSTOMIZATIONS

	MPM 802 D
Options on request	· Spark arrester muffler · Built-in polarity reversing switch · GRT4W: 4 wheels site trailer - max. speed 10 km/h
Accessories	· 1- ST50 Welding cables with accessories · 2- Reverse polarity switch kit (separate) · 3- Welding remote control · 4- MIG wire feeder with 10 mt connection cable · 5- Parallel welding box with ammeter and voltmeter (P-BOX) · GRT2W: 2 wheels site trailer - max. speed 10 km/h

1



2



3



4



5



NOTE