GenSet

GVi 27 LOW



SUPER SILENCED
Soundproof box

Easy installation

Compact

The engine revs vary depending on the required load; therefore, if you have only few electrical applications connected, the genset will automatically calibrate to the required power, while ensuring exceptional voltage and frequency stability. That means lower fuel consumption, reduction of emissions, lower need of maintenance and more silent operation.
Extremely compact and quiet, the genset is equipped with a double shock absorbing system to increase comfort: the first on absorbs vibrations from engine-alternator to the frame, the second one absorbs residual micro-vibrations from frame to vessel.

WATTER
Forhandler / Distributor / Distribuidor / Återförsäljare:
Watter ApS · Torvet 21, DK-6700 Esbjerg · CVR 32340997 · +45 7026 1600 · info@watter.dk · watter.dk

GVi 27 LOW STANDARD EQUIPMENT

Control panel

_ CBU EVO IL4 device controls and drives the genset. The large display and control pushbuttons allow an easy use and monitoring:

- Manual start
- Voltage Vac
- Frequency Hz
- Engine rpm
- Hour meter
- Genset battery voltage
- Oil low pressure alarm
- Engine preheating
- Engine high temperature alarm
- Alarm history
- Maintenance warnings

_ Emergency stop button

_ Protection against short circuit and overload

Engine

_ Easy maintenance access to the feeding and lubrification systems, the sea water pump and the air filter

_ Double vibration dumping system

_ Oil drain pump

Soundproof cabin

_Made of extremely light marine aluminum with very high resistance to external agents

Insulated poles kit (for metal hull boats), dry exhaust kit and keel cooling kit are available on request

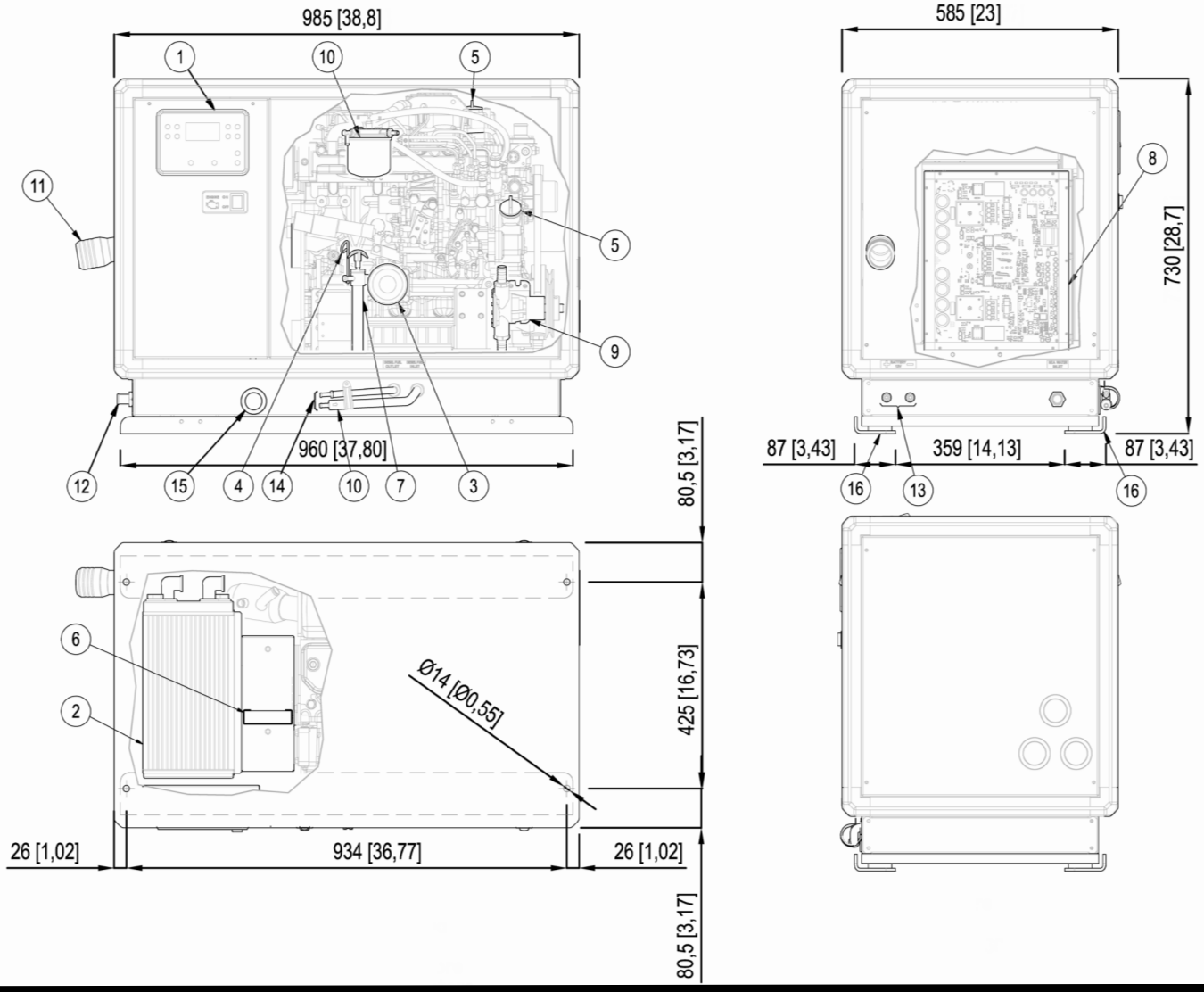

1. Control panel
2. Air / water exchanger
3. Oil filter cartridge
6. Air filter
7. Oil drump pump
8. Inverter
11. Exhaust manifold (d.60 mm)
12. Sea water intake
14. Fuel tank connections (d.8 mm)
15. Cables outlet

GVi 27 LOW TECHNICAL DATA

	50 Hz	60 Hz
AC alternator	Permanent magnets (PMG)	
Cooling	Air/Water (Intercooler W/A)	
Voltage	230 V	240 V
Frequency	50 Hz	60 Hz
Amps	117.4 A	112.5 A
Continuous power	25 kW	
Max power	27 kW	
Power Factor	cos ø 1	
Insulating class	H	
Voltage stability	±1%	
Frequency stability	±1%	

The power is referred to a sea water temperature up to 31°, an atmosferic pressure of 100 KPa and a humidity percentage of 30%

Model	Yanmar 4TNV88	
Type	Diesel 4 stroke	
Cylinders	nr 4	
Cylinder block material	Cast iron	
Bore	88 mm - 3.47 in	
Stroke	90 mm - 3.55 in	
Displacement	2190 cc - 133.64 CID	
Power	42.9 hp - 31.56 kWm (at 2200 RPM)	
RPM	1850 - 2400	
Compression ratio	19.1:1	
Combustion system	Direct injection	
Engine head material	Cast iron	
Speed governor	With actuator	
Lubrication system	Forced	
Oil sump capacity with filter	6.7 l - 1.89 gl	
Engine stop system	Electromagnet	
Fuel pump	Electronic with actuator	
Max. fuel pump head	700 mm - 2.29 ft	
Fuel consumption	7.2 l/h - 1.90 gl/h	
Air intake	1500 l/min - 396.25 gl/min	1800 l/min - 475.50 gl/min
Starting battery	80 Ah - 12 V	
Battery charger	40 Ah - 12 V	
Starter motor	1.2 kW - 12 V	
Max. inclination	30°	
Water pump flow	30 l/min - 7.92 gl/min	
Sea water inlet pipe Ø	20 mm - 3/4"	
Exhaust pipe Ø	60 mm - 2" 1/2	
Input/Output fuel pipe Ø	8 mm - 5/16"	

Dimensions (L x W x H)	985 x 585 x 730 mm - 38.8 x 23 x 28.7 in (with soundproof box)
Weight	365 Kg - 805 lb (with soundproof box)
Noise Level	55 dBA at 7 mt (23 ft)

GVi 27 LOW CUSTOMIZATIONS

	Accessory	Code
Accessories on request	· Filtering kit: sea water inlet, sea water strainer, taps, fittings D.20 - ref.4	016422
	· Siphon break D.20 - ref.3	03796
	· Vetus LP60 muffler	71711
	· Vetus silencer MP60	71746
	· Silencer Vetus c.71746 with soundproofing sponge	039865
	· Vetus Separator LGS6050	71712
	· Centek muffler 2" 1/2 - ref.5	71714
	· Centek 2" 1/2 water/gas exhaust separator - ref.6	71713
	· Parallel cable	036625
	· Soundproofing cabin	041194
	· Remote control panel START/STOP with 20 mt cable for Comap IL4 - ref.1	037698
	· Remote control panel for Comap IL4 with 20mt cable - ref.2	039608
	· Cruise KIT	913819



1



2


3

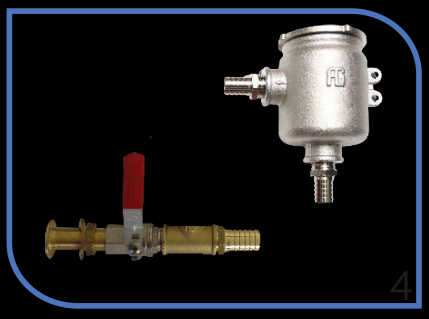
4


5


6