GenSet

GSi 9000 - 9006



SUPER SILENCED
Soundproof box

Easy installation

Compact

The intercooler W/A assures the perfect functioning of the generator independently of the external ambient temperature, therefore the alternator and the engine will work at ideal temperature optimizing the performance and reliability of the gen-set.
The generator may be installed in any room on the vessel without the need of ventilation blowers.
Extremely compact and quiet, the generator is equipped with a double shock absorbing system to increase comfort: the first one absorbs vibrations from engine-alternator to the frame, the second one absorbs residual micro-vibrations from frame to vessel.

WATTER
Forhandler / Distributor / Distribuidor / Återförsäljare:
Watter ApS · Torvet 21, DK-6700 Esbjerg · CVR 32340997 · +45 7026 1600 · info@watter.dk · watter.dk

GSi 9000 - 9006 STANDARD EQUIPMENT

Control panel

_ The CBU module is equipped with a large display and includes multiple functions for the complete monitoring of the generator:

- Manual start
- Voltage Vac
- Frequency Hz
- Engine rpm
- Hour meter
- Genset battery voltage
- Oil low pressure alarm
- Engine high temperature alarm
- Alternator high temperature alarm
- Alarm history
- Maintenance warnings and 10 meters connection cable

_ Emergency stop button

_ Magneto-thermal protection

Engine

_Easy maintenance access to the feeding and lubrification systems, the sea/water pump and the air filter

_Double vibration dumping system

_Oil drain pump

Soundproof cabin

_Made of extremely light marine aluminum with very high resistance to external agents

Insulated poles kit (for metal hull boats), dry exhaust kit and keel cooling kit are available on request

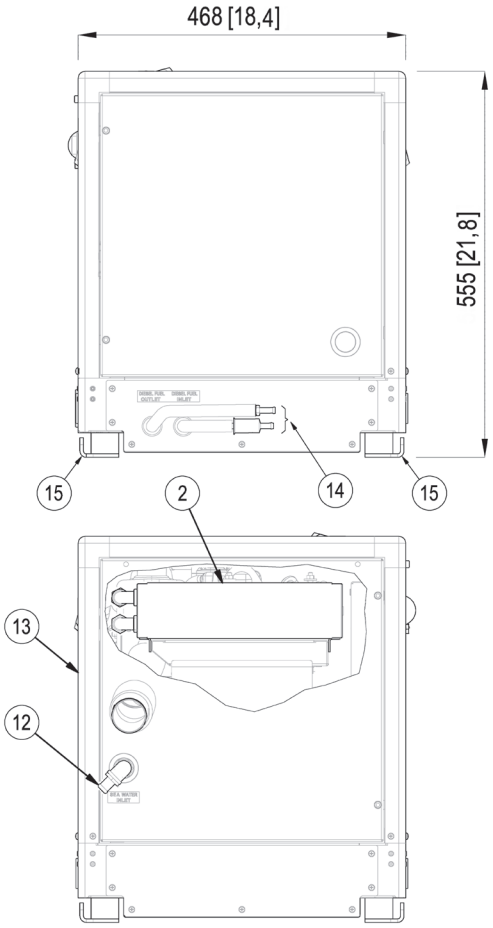

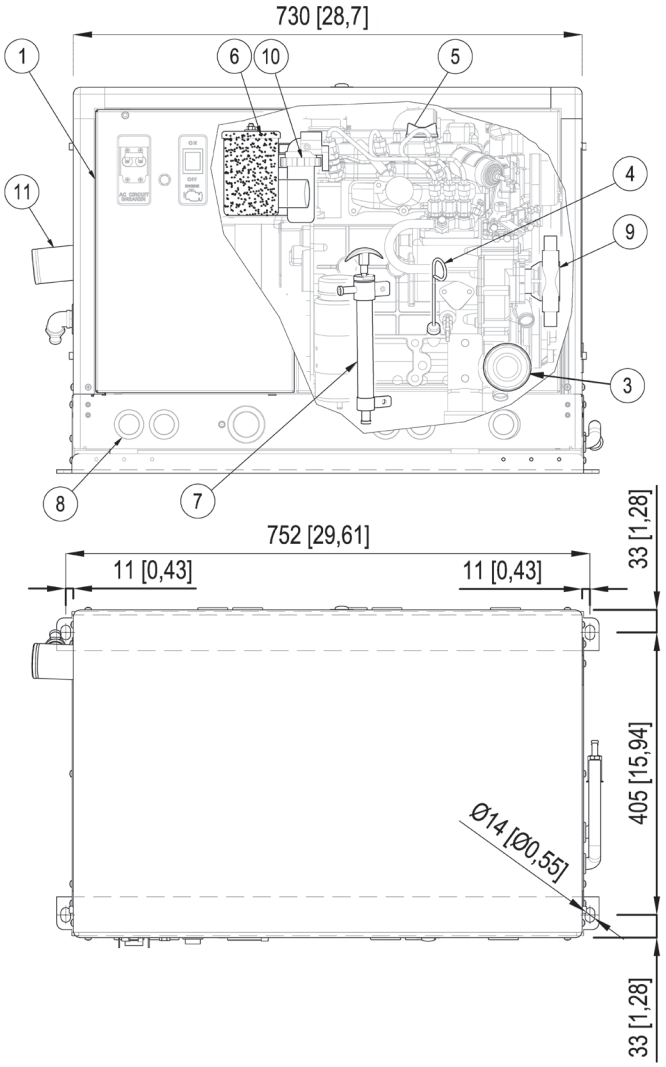

1. Control panel
2. Air / water exchanger
3. Oil filter cartridge
4. Oil dipstick
6. Air filter
7. Oil drump pump
8. Cables outlet
9. Sea water pump
11. Exhaust manifold
12. (d.50 mm)
13. Sea water intake
14. (d.16 mm)
16. Fuel tank connections (d.8 mm)
17. Genset fixing brackets

GSi 9000 - 9006 TECHNICAL DATA

	50 Hz	60 Hz
AC alternator	Synchronous, 2 poles, brush less, self-excited, self-regulated	
Cooling	Air/Water (Intercooler W/A)	
Voltage	115 or 230 V	120 or 240 V
Frequency	50 Hz	60 Hz
Amps	74.8 or 37.4 A	80 or 40 A
Max. Power	8.6 kW	9.6 kW
Continuous power	7.8 kW	8.8 kW
Power Factor	cos ø 1	
Insulating class	H	
Voltage stability	±10%	
Frequency stability	±5%	

The power is referred to a sea water temperature up to 31°, an atmosferic pressure of 100 KPa and a humidity percentage of 30%

Model	Kubota D722	
Type	Diesel 4 stroke	
Cylinders	nr 3	
Cylinder block material	Cast iron	
Bore	67 mm - 2.64 in	
Stroke	68 mm - 2.68 in	
Displacement	719 cc - 43.9 CID	
Power	16.6 hp - 12.21 kWm	20 hp - 14.71 kWm
RPM	3000	3600
Compression ratio	23.5:1	
Combustion system	Indirect injection	
Engine head material	Cast iron	
Speed governor	Centrifugal mechanical	
Lubrication system	Forced	
Oil sump capacity with filter	2.7 l - 0.76 gl	
Engine stop system	Electromagnet	
Fuel pump	Electric	
Max. fuel pump head	700 mm - 27.5 in	
Fuel consumption	3.2 l/h - 0.85 gl/h	3.9 l/h - 1.03 gl/h
Air intake	860 l/min - 30 cfm	1032 l/min - 36 cfm
Starting battery	65 Ah - 12 V	
Battery charger	14 Ah - 12 V	
Starter motor	1.2 kW - 12 V	
Max. inclination	25°	
Water pump flow	20 l/min - 5.3 gl/min	24 l/min - 6.34 gl/min
Sea water inlet pipe Ø	16 mm - 5/8"	
Exhaust pipe Ø	50 mm - 2"	
Input/Output fuel pipe Ø	8 mm - 5/16"	

Dimensions (L x W x H)	730 x 468 x 555 mm - 28.7 x 18.4 x 21.80 in (with soundproof box)	
Weight	195 Kg - 430 lb (with soundproof box)	
Noise Level	54 dBA at 7 mt (23 ft)	56 dBA at 7 mt (23 ft)

GSi 9000 - 9006 CUSTOMIZATIONS

	Accessory	Code
Accessories on request	· Installation kit D.50: filtering set, exhaust set and siphon break D.16	012276
	· Filtering kit: sea water inlet, sea water strainer, taps, fittings D.16 - ref.3	04349
	· Exhaust kit: muffler, silencer, exhaust outlet D.50 MASE - ref.1	04658
	· Super silenced exhaust kit & exhaust gas separator D.50 MASE - ref.4	010078
	· Siphon break D.16 - ref.2	04290
	· Mase Muffler D.50	70795
	· Silencer Mase D.50	71809
	· Mase water/gas exhaust separator D.50	04488
	· Vetus LP50 muffler	71148
	· Vetus silencer MP50	71751
	· Silencer c.71751 with soundproofing sponge	039866
	· Vetus Separator LGS5038	71717
	· Centek muffler 2"	71155
	· Centek 2" water/gas exhaust separator	71156
	· Water protection - ref.5	040539
	· Soundproofing cabin	040705
	· Remote START/STOP 20-meter control kit for CBU (3000 RPM)	041238
	· Cruise KIT 2023	912405
	· Cruise KIT 2024	913845





