GenSet

GSi 8 - 9.06



SUPER SILENCED
Soundproof box

Easy installation

Compact

The intercooler W/A assures the perfect functioning of the generator independently of the external ambient temperature, therefore the alternator and the engine will work at ideal temperature optimizing the performance and reliability of the gen-set.
The generator may be installed in any room on the vessel without the need of ventilation blowers.
Extremely compact and quiet, the generator is equipped with a double shock absorbing system to increase comfort: the first one absorbs vibrations from engine-alternator to the frame, the second one absorbs residual micro-vibrations from frame to vessel.

GSi 8 - 9.06 STANDARD EQUIPMENT

Control panel

_ CBU EVO IL4 device controls and drives the genset. The large display and control pushbuttons allow easy use and monitoring:
- Manual start
- Voltage Vac
- Frequency Hz
- Hour meter
- Genset battery voltage
- Oil low pressure alarm
- Engine preheating
- Engine high temperature alarm
- Alternator battery charger failure alarm
- Protection alarm for frequency and rpm
- Alarm history
- Maintenance warnings
- General alarm outlet
- RUN outlet
- Ready outlet
- Programmable AUX outlet

_ Emergency stop button

_ Magneto-thermal protection

Engine

_Easy maintenance access to the feeding and lubrification systems, the sea/water pump and the air filter

_Double vibration dumping system

_Oil drain pump

Soundproof cabin

_Made of extremely light marine aluminum with very high resistance to external agents

Insulated poles kit (for metal hull boats), dry exhaust kit and keel cooling kit are available on request

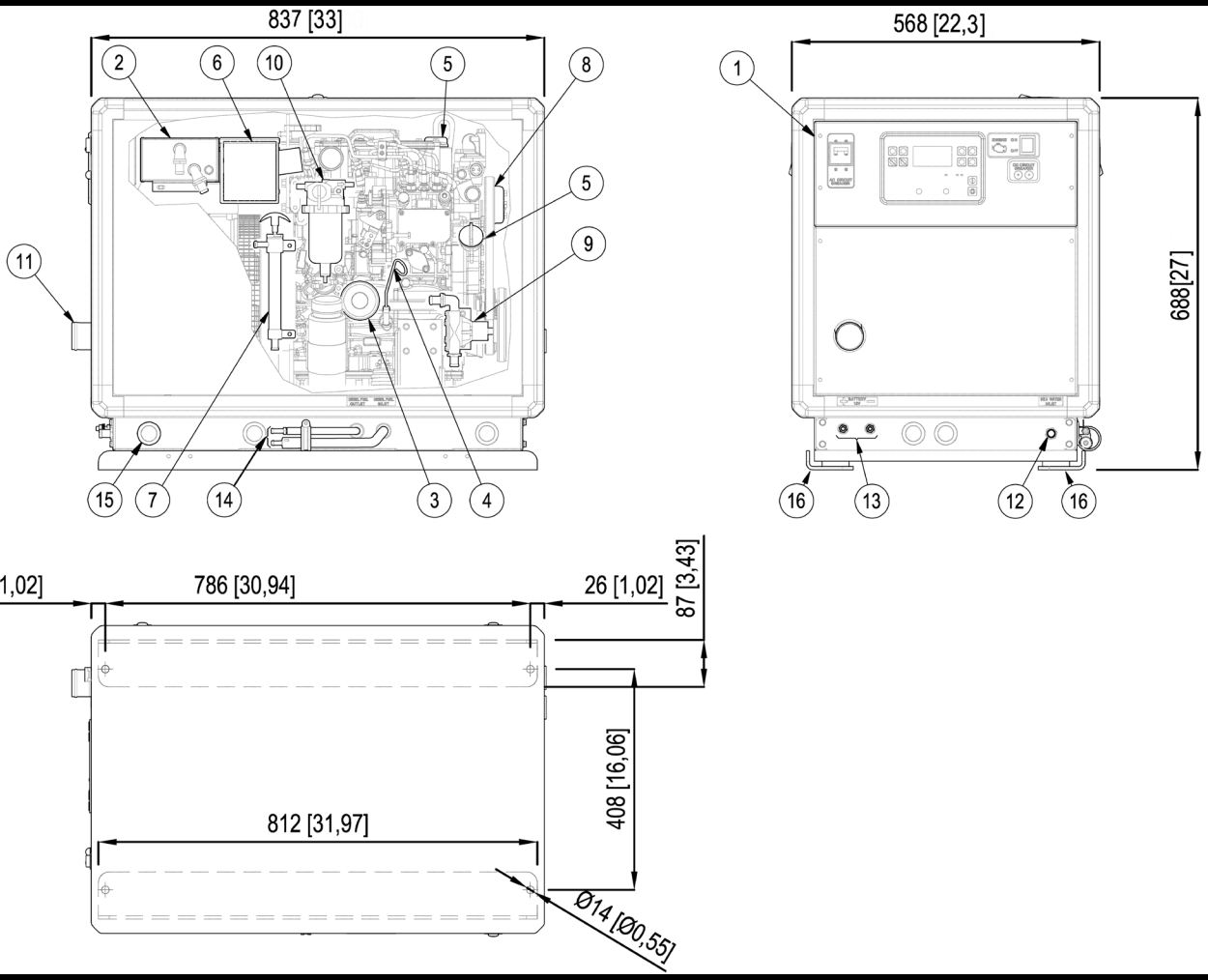

1. Control panel
2. Air / water exchanger
6. Air filter
7. Oil drump pump
11. Exhaust manifold (d.50 mm)
14. Fuel tank connections (d.8 mm)

GSi 8 - 9.06 TECHNICAL DATA

	50 Hz	60 Hz
AC alternator	Synchronous, 4 poles, brushless, self-energized, with automatic voltage regulator (AVR)	
Cooling	Air/Water (Intercooler W/A)	
Voltage	115 or 230 V	120 or 240 V
Frequency	50 Hz	60 Hz
Amps	69.6 or 34.8 A	75 or 37.1 A
Max. Power	8 kW	9 kW
Continuous power	7.3 kW	8.2 kW
Power Factor	cos ø 1	
Insulating class	H	
Voltage stability	±2%	
Frequency stability	±5%	

The power is referred to a sea water temperature up to 31°, an atmosferic pressure of 100 KPa and a humidity percentage of 30%

Model	Yanmar 3TNV80F	
Type	Diesel 4 stroke	
Cylinders	nr 3	
Cylinder block material	Cast iron	
Bore	80 mm - 3.15 in	
Stroke	84 mm - 3.31 in	
Displacement	1267 cc - 77.32 CID	
Power	12.74 hp - 9.37 kWm (at 1500 RPM)	14.35 hp - 10.56 kWm (at 1800 RPM)
RPM	1500	1800
Compression ratio	23:1	
Combustion system	Direct injection	
Engine head material	Cast iron	
Speed governor	Centrifugal mechanical	
Lubrication system	Forced	
Oil sump capacity with filter	3 l - 0.85 gl	
Engine stop system	Electromagnet	
Fuel pump	Electric	
Max. fuel pump head	700 mm - 27.5 in	
Fuel consumption	2.3 l/h - 0.61 gl/h	2.9 l/h - 0.77 gl/h
Air intake	790 l/min - 28 cfm	904 l/min - 32 cfm
Starting battery	65 Ah - 12 V	
Battery charger	40 Ah - 12 V	
Starter motor	1.2 kW - 12 V	
Max. inclination	25°	
Water pump flow	25 l/min - 6.6 gl/min	28 l/min - 6.1 gl/min
Sea water inlet pipe Ø	16 mm - 5/8"	
Exhaust pipe Ø	50 mm - 2"	
Input/Output fuel pipe Ø	8 mm - 5/16"	

Dimensions (L x W x H)	837 x 568 x 688 mm - 33 x 22 x 27 in (with soundproof box)	
Weight	295 Kg - 650 lb (with soundproof box)	
Noise Level	49 dBA at 7 mt (23 ft)	51 dBA at 7 mt (23 ft)

GSi 8 - 9.06 CUSTOMIZATIONS

	Accessory	Code
Accessories on request	· Installation kit D.50: filtering set, exhaust set and siphon break D.16	012276
	· Filtering kit: sea water inlet, sea water strainer, taps, fittings D.16 - ref.5	04349
	· Exhaust kit: muffler, silencer, exhaust outlet D.50 MASE - ref.3	04658
	· Super silenced exhaust kit & exhaust gas separator D.50 MASE - ref.6	010078
	· Siphon break D.16 - ref.4	04290
	· Mase Muffler D.50	70795
	· Silencer Mase D.50	71809
	· Mase water/gas exhaust separator D.50	04488
	· Vetus LP50 muffler	71148
	· Vetus silencer MP50	71751
	· Silencer c.71751 with soundproofing sponge	039866
	· Vetus Separator LGS5038	71717
	· Centek muffler 2" - ref.7	71155
	· Centek 2" water/gas exhaust separator - ref.8	71156
	· Remote START/STOP panel with 20m cable for Comap IL4 - ref.1	037698
	· Comap IL4 remote start panel with 20-meter cable - ref.2	039608
	· Cruise KIT	913831



1



2


3


4

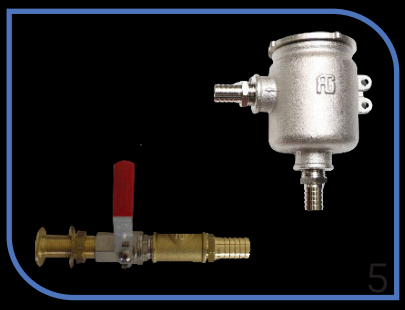
5





